GM78L00 Series

100mA POSITIVE VOLTAGE REGULATOR

Description

The GM78L00 series in positive voltage regulators are cost effective devices to provide a simple solution for a wide variety of application, which requires a regulated supply of up to 100mA

These virtually indestructible positive voltage regulators are protected by thermal shut down and internal current limiting. Most applications require no external components.

The GM78L00 is very versatile, which can be used as fixed voltage regulators in a wide range of application, including both local and on-card regulation for elimination of noise and distribution problems associated with single-point regulation. They can also be used with power pass elements to make high current voltage regulators.

The GM78L00 series offer impressive performance advantages over traditional zener diode and resistor combinations, provide lower output impedance and reduced quiescent current.

Features

- **Maximum output current up 100mA**
- **Fixed output voltage options: 5V, 6V, 8V, 9V, 10V, 12V, 15V, 18V and 24V**
- **No external components required**
- **Internal thermal overload protection**
- **Internal short circuit current limiting**
- **Available in TO-92, SOT-89 and SOP-8 packages**

Typical Application Circuit

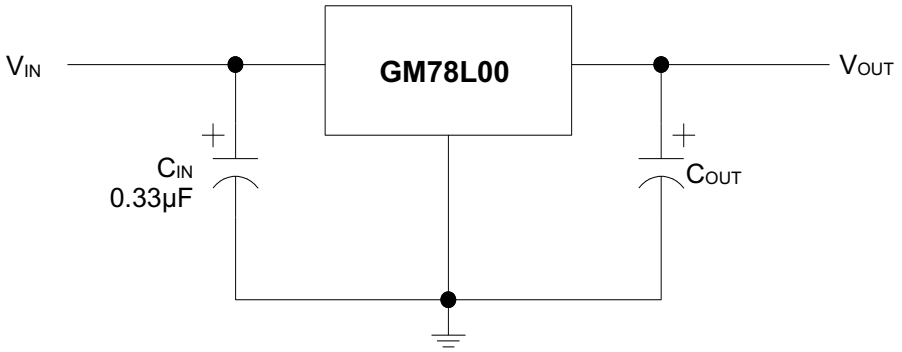

Marking Information and Pin Configurations (Top View)

TO-92

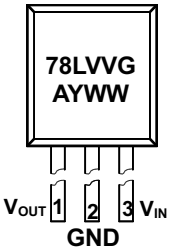

SOT-89

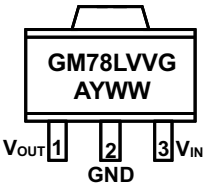

SO-8

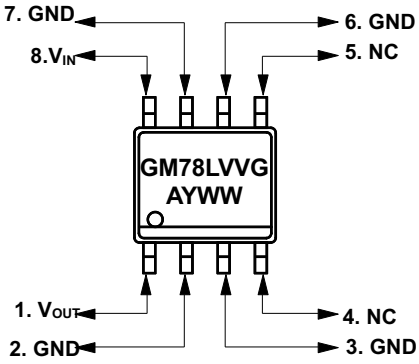

VV : Output Voltage Codes (05: 5.0V, …12:12V)
G : Green Product
A: Assembly/Test Site Code
Y: Year
WW: Week

Ordering Information

Ordering Number	V_{OUT}	Package	Shipping
GM78L**00**T92BG	**00** = 5.0V 6.0V 8.0V 9.0V 10.0V 12.0V 15.0V 18.0V 24.0V	TO-92	1,000 Units/ESD Bag
GM78L**00**ST89RG		SOT-89	1,000 Units/Tape and Reel
GM78L**00**S8TG		SO-8	100 Units/Tube
GM78L**00**S8RG		SO-8	2,500 Units/Tape & Reel

Absolute Maximum Ratings

PARAMETER		SYMBOL	RATINGS	UNITS
Input Voltage	GM78L05 to GM78L10	V_{IN}	30	V
	GM78L12 to GM78L18		35	
	GM78L24		40	
Operating Ambient Temperature		T_A	- 40 to 125	°C
Storage Temperature		T_{stg}	- 60 to 150	°C

Block Diagram

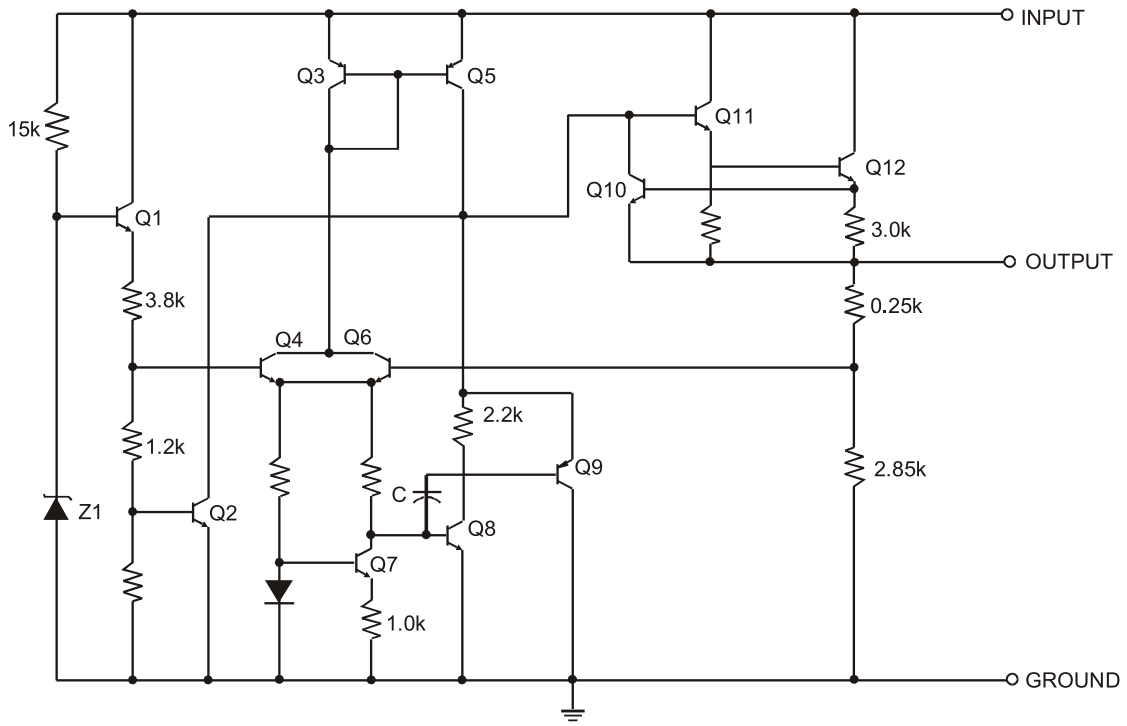

GM78L05 Electrical Characteristics (V_I = 10V, I_O = 40mA unless otherwise noted)

Parameter	Test Condition		Min	Typ	Max	Unit
Output Voltage		25°C	4.8	5.0	5.2	V
	I_O =1mA to 40mA V_I = 7V to 20V	0°C to 125°C	4.75	5.0	5.25	
	I_O = 1mA to 70mA		4.75	5.0	5.25	
Input Regulation	V_I = 7V to 20V	25°C		32	150	mV
	V_I = 8V to 20V			26	100	
Ripple Rejection	V_I = 8V to 18V, f = 120KHz	25°C	41	49		dB
Output Regulation	I_O = 1mA to 100mA	25°C		15	60	mV
	I_O = 1mA to 40mA			8	30	
Output Noise Voltage	F = 10Hz to 100KHz	25°C		42		μV
Bias Current		25°C		3.8	6	mA
		125°C			5.5	
Bias Current Change	V_I = 8V to 20V	0°C to 125°C			1.5	mA
	I_O = 1mA to 40mA				0.1	

GM78L06 Electrical Characteristics (V_I = 11V, I_O = 40mA unless otherwise noted)

Parameter	Test Condition		Min	Typ	Max	Unit
Output Voltage		25°C	5.75	6.0	6.25	V
	I_O =1mA to 40mA V_I = 8V to 20V	0°C to 125°C	5.70	6.0	6.30	
	I_O = 1mA to 70mA		5.70	6.0	6.30	
Input Regulation	V_I = 8V to 20V	25°C		35	175	mV
	V_I = 9V to 20V			29	125	
Ripple Rejection	V_I = 9V to 18V, f = 120KHz	25°C	10	18		dB
Output Regulation	I_O = 1mA to 100mA	25°C		16	80	mV
	I_O = 1mA to 40mA			9	40	
Output Noise Voltage	F = 10Hz to 100KHz	25°C		46		μV
Bias Current		25°C		3.9	6	mA
		125°C			5.5	
Bias Current Change	V_I = 9V to 20V	0°C to 125°C			1.5	mA
	I_O = 1mA to 40mA				0.1	

GM78L08 Electrical Characteristics (V_I = 14V, I_O = 40mA unless otherwise noted)

Parameter	Test Condition		Min	Typ	Max	Unit
Output Voltage		25°C	7.7	8.0	8.3	V
	I_O =1mA to 40mA V_I = 10.5V to 23V	0°C to 125°C	7.6	8.0	8.4	
	I_O = 1mA to 70mA		7.6	8.0	8.4	
Input Regulation	V_I = 10.5V to 23V	25°C		42	175	mV
	V_I = 11V to 23V			36	125	
Ripple Rejection	V_I = 13V to 23V, f = 120KHz	25°C	37	46		dB
Output Regulation	I_O = 1mA to 100mA	25°C		18	80	mV
	I_O = 1mA to 40mA			10	40	
Output Noise Voltage	F = 10Hz to 100KHz	25°C		54		μV
Dropout Voltage		25°C		1.7		V
Bias Current		25°C		4	6	mA
		125°C			5.5	
Bias Current Change	V_I = 11V to 23V	0°C to 125°C			1.5	mA
	I_O = 1mA to 40mA				0.1	

GM78L09 Electrical Characteristics (V_I = 16V, I_O = 40mA unless otherwise noted)

Parameter	Test Condition		Min	Typ	Max	Unit
Output Voltage		25°C	8.6	9.0	9.4	V
	I_O =1mA to 40mA V_I = 12V to 24V	0°C to 125°C	8.55	9.0	9.45	
	I_O = 1mA to 70mA		8.55	9.0	9.45	
Input Regulation	V_I = 12V to 24V	25°C		45	175	mV
	V_I = 13V to 24V			40	125	
Ripple Rejection	V_I = 15V to 25V, f = 120KHz	25°C	38	44		dB
Output Regulation	I_O = 1mA to 100mA	25°C		19	90	mV
	I_O = 1mA to 40mA			11	40	
Output Noise Voltage	F = 10Hz to 100KHz	25°C		58		μV
Dropout Voltage		25°C		1.7		V
Bias Current		25°C		4.1	6	mA
		125°C			5.5	
Bias Current Change	V_I = 13V to 24V	0°C to 125°C			1.5	mA
	I_O = 1mA to 40mA				0.1	

GM78L10 Electrical Characteristics (V_I = 17V, I_O = 40mA unless otherwise noted)

Parameter	Test Condition		Min	Typ	Max	Unit
Output Voltage		25°C	9.6	10	10.4	V
	I_O =1mA to 40mA V_I = 13V to 25V	0°C to 125°C	9.5	10	10.5	
	I_O = 1mA to 70mA		9.5	10	10.5	
Input Regulation	V_I = 13V to 25V	25°C		51	175	mV
	V_I = 14V to 24V			42	125	
Ripple Rejection	V_I = 15V to 25V, f = 120KHz	25°C	38	44		dB
Output Regulation	I_O = 1mA to 100mA	25°C		20	90	mV
	I_O = 1mA to 40mA			11	40	
Output Noise Voltage	F = 10Hz to 100KHz	25°C		62		μV
Dropout Voltage		25°C		1.7		V
Bias Current		25°C		4.2	6	mA
		125°C			5.5	
Bias Current Change	V_I = 14V to 25V	0°C to 125°C			1.5	mA
	I_O = 1mA to 40mA				0.1	

GM78L12 Electrical Characteristics (V_I = 19V, I_O = 40mA unless otherwise noted)

Parameter	Test Condition		Min	Typ	Max	Unit
Output Voltage		25°C	11.5	12	12.5	V
	I_O =1mA to 40mA V_I = 14V to 27V	0°C to 125°C	11.4	12	12.6	
	I_O = 1mA to 70mA		11.4	12	12.6	
Input Regulation	V_I = 14.5V to 27V	25°C		55	250	mV
	V_I = 16V to 27V			49	200	
Ripple Rejection	V_I = 16V to 27V, f = 120KHz	25°C	37	42		dB
Output Regulation	I_O = 1mA to 100mA	25°C		22	100	mV
	I_O = 1mA to 40mA			13	50	
Output Noise Voltage	F = 10Hz to 100KHz	25°C		70		μV
Dropout Voltage		25°C		1.7		V
Bias Current		25°C		4.3	6.5	mA
		125°C			6	
Bias Current Change	V_I = 16V to 27V	0°C to 125°C			1.5	mA
	I_O = 1mA to 40mA				0.1	

GM78L15 Electrical Characteristics (V_I = 23V, I_O = 40mA unless otherwise noted)

Parameter	Test Condition		Min	Typ	Max	Unit
Output Voltage		25°C	14.4	15	15.6	V
	I_O =1mA to 40mA V_I = 17.5V to 30V	0°C to 125°C	14.25	15	15.75	
	I_O = 1mA to 70mA		14.25	15	15.75	
Input Regulation	V_I = 17.5V to 30V	25°C		65	300	mV
	V_I = 19V to 30V			58	250	
Ripple Rejection	V_I = 18.5V to 28.5V, f = 120KHz	25°C	34	39		dB
Output Regulation	I_O = 1mA to 100mA	25°C		25	150	mV
	I_O = 1mA to 40mA			15	75	
Output Noise Voltage	F = 10Hz to 100KHz	25°C		82		μV
Dropout Voltage		25°C		1.7		V
Bias Current		25°C		4.6	6.5	mA
		125°C			6	
Bias Current Change	V_I = 19V to 30V	0°C to 125°C			1.5	mA
	I_O = 1mA to 40mA				0.1	

GM78L18 Electrical Characteristics (V_I = 26V, I_O = 40mA unless otherwise noted)

Parameter	Test Condition		Min	Typ	Max	Unit
Output Voltage		25°C	17.3	18	18.7	V
	I_O =1mA to 40mA V_I = 20.5V to 33V	0°C to 125°C	17.1	18	18.9	
	I_O = 1mA to 70mA		17.1	18	18.9	
Input Regulation	V_I = 20.5V to 33V	25°C		70	360	mV
	V_I = 22V to 33V			64	300	
Ripple Rejection	V_I = 21.5V to 31.5V, f = 120KHz	25°C	32	36		dB
Output Regulation	I_O = 1mA to 100mA	25°C		27	180	mV
	I_O = 1mA to 40mA			19	90	
Output Noise Voltage	F = 10Hz to 100KHz	25°C		89		μV
Dropout Voltage		25°C		1.7		V
Bias Current		25°C		4.7	6.5	mA
		125°C			6	
Bias Current Change	V_I = 22V to 33V	0°C to 125°C			1.5	mA
	I_O = 1mA to 40mA				0.1	

GM78L24 Electrical Characteristics (V_I = 32V, I_O = 40mA unless otherwise noted)

Parameter	Test Condition		Min	Typ	Max	Unit
Output Voltage		25°C	23	24	25	V
	I_O =1mA to 40mA V_I = 26.5V to 39V	0°C to 125°C	22.8	24	25.2	
	I_O = 1mA to 70mA		22.8	24	25.2	
Input Regulation	V_I = 26.5V to 39V	25°C		95	480	mV
	V_I = 29V to 39V			78	400	
Ripple Rejection	V_I = 21.5V to 31.5V, f = 120KHz	25°C	32	36		dB
Output Regulation	I_O = 1mA to 100mA	25°C		41	240	mV
	I_O = 1mA to 40mA			28	120	
Output Noise Voltage	F = 10Hz to 100KHz	25°C		97		μV
Dropout Voltage		25°C		1.7		V
Bias Current		25°C		4.8	6.5	mA
		125°C			6	
Bias Current Change	V_I = 26V to 39V	0°C to 125°C			1.5	mA
	I_O = 1mA to 40mA				0.1	

Typical Performance Characteristics

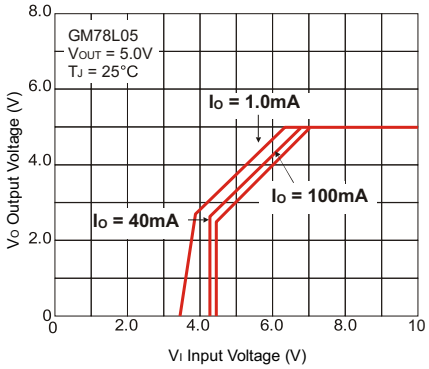

Figure 1. Dropout Characteristics

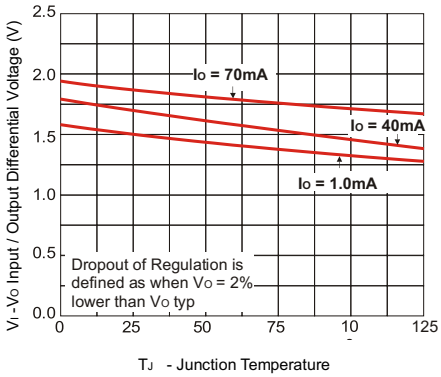

Figure 2. Dropout Voltage vs. Junction Temperature

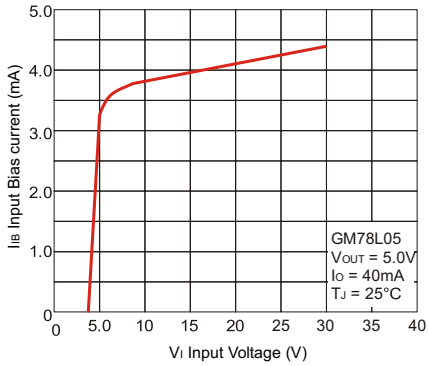

Figure 3. Input Bias Current vs. Input Voltage

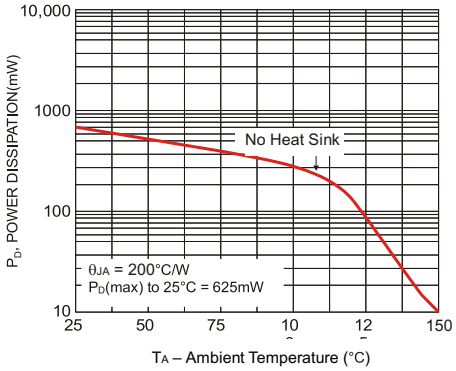

Figure 4. Maximum Average Power Dissipation vs. Ambient Temperature TO-92 Package

Package Outline Dimensions – SOT 89

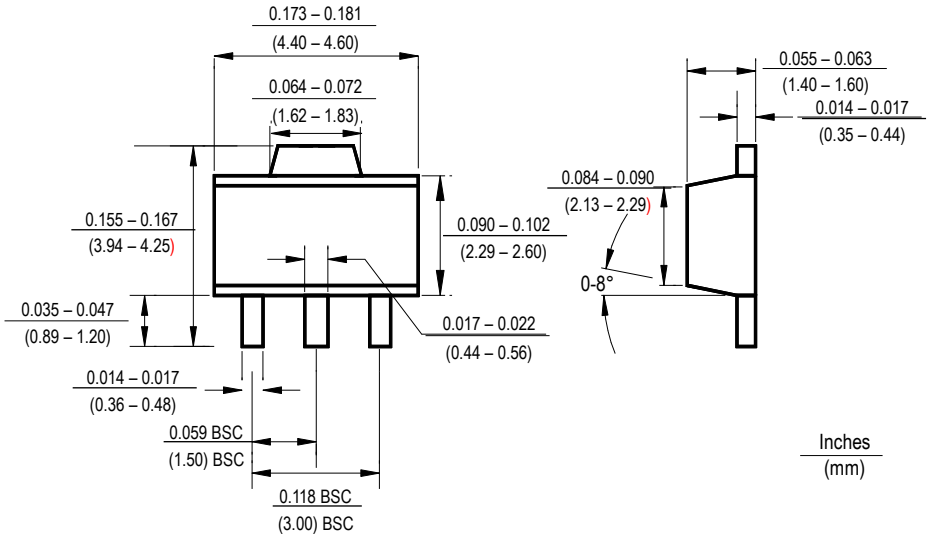

Note: All dimensions for SOT89 package are subject to change due to manufacturing concerns. However, they will be in full compliance with JEDEC TO-243c standard.

Package Outline Dimensions – TO 92

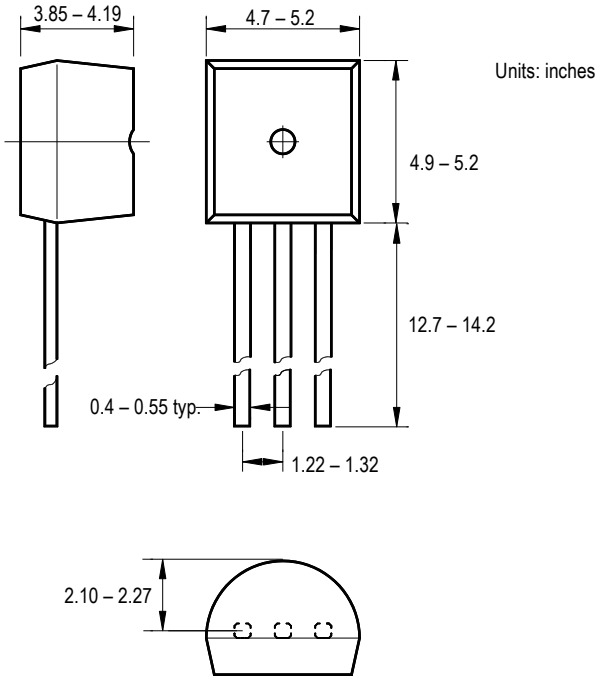

Package Outline Dimensions – SO 8

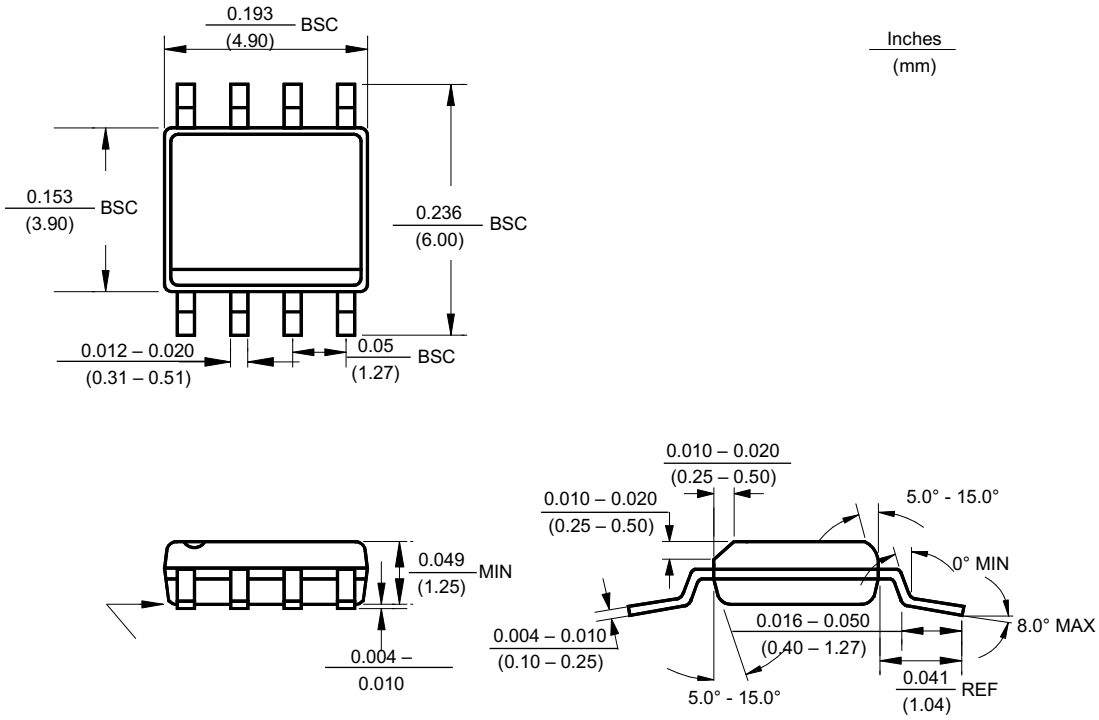

Note: All dimensions for SOP 8 package are subject to change due to manufacturing concerns. However, they will be in full compliance with JEDEC MS-012B standard.

Ordering Number

GM	78L	05	T92	B	G
HY Gamma	Circuit Type	Output Voltages 05: 5.0V 06: 6.0V 08: 8.0V 09: 9.0V 10: 10V 12: 12V 15: 15V 18: 18V 24: 24V	Package Type T92: TO-92 ST89: SOT-89 S8: SO-8	Shipping Type B: Bag T: Tube R: Tape & Reel	G: Green

Note:

Green products:

- Lead-free (RoHS compliant)
- Halogen free(Br or Cl does not exceed 900ppm by weight in homogeneous material and total of Br and Cl does not exceed 1500ppm by weight)

IMPORTANT NOTICE AND DISCLAIMER

Hengyuan Microelectronics INC. products are not intended for use in life care, critical care, medical, safety equipment, or similar applications where Product failure could result in loss of life or personal or physical harm, or any military or defense application, or any governmental procurement to which special terms or provisions may apply.